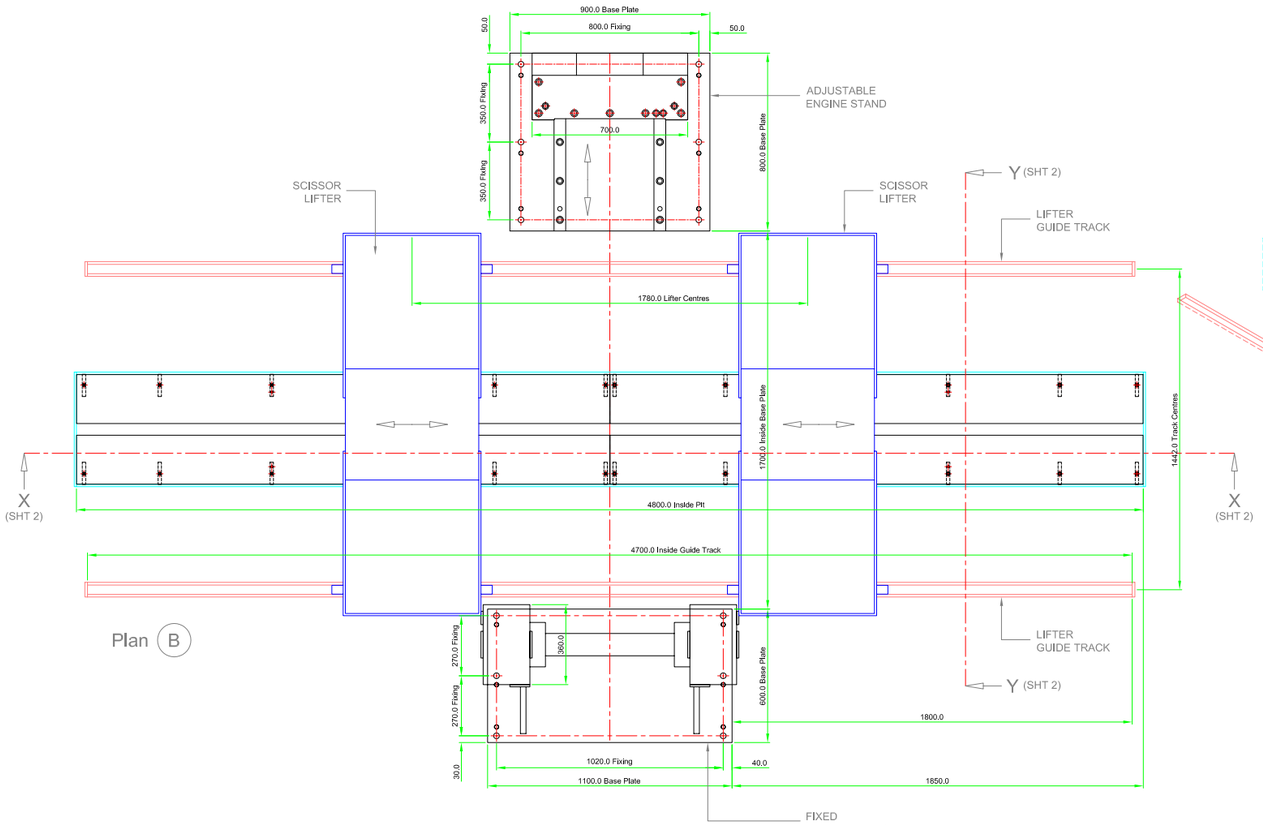

Plan (B)

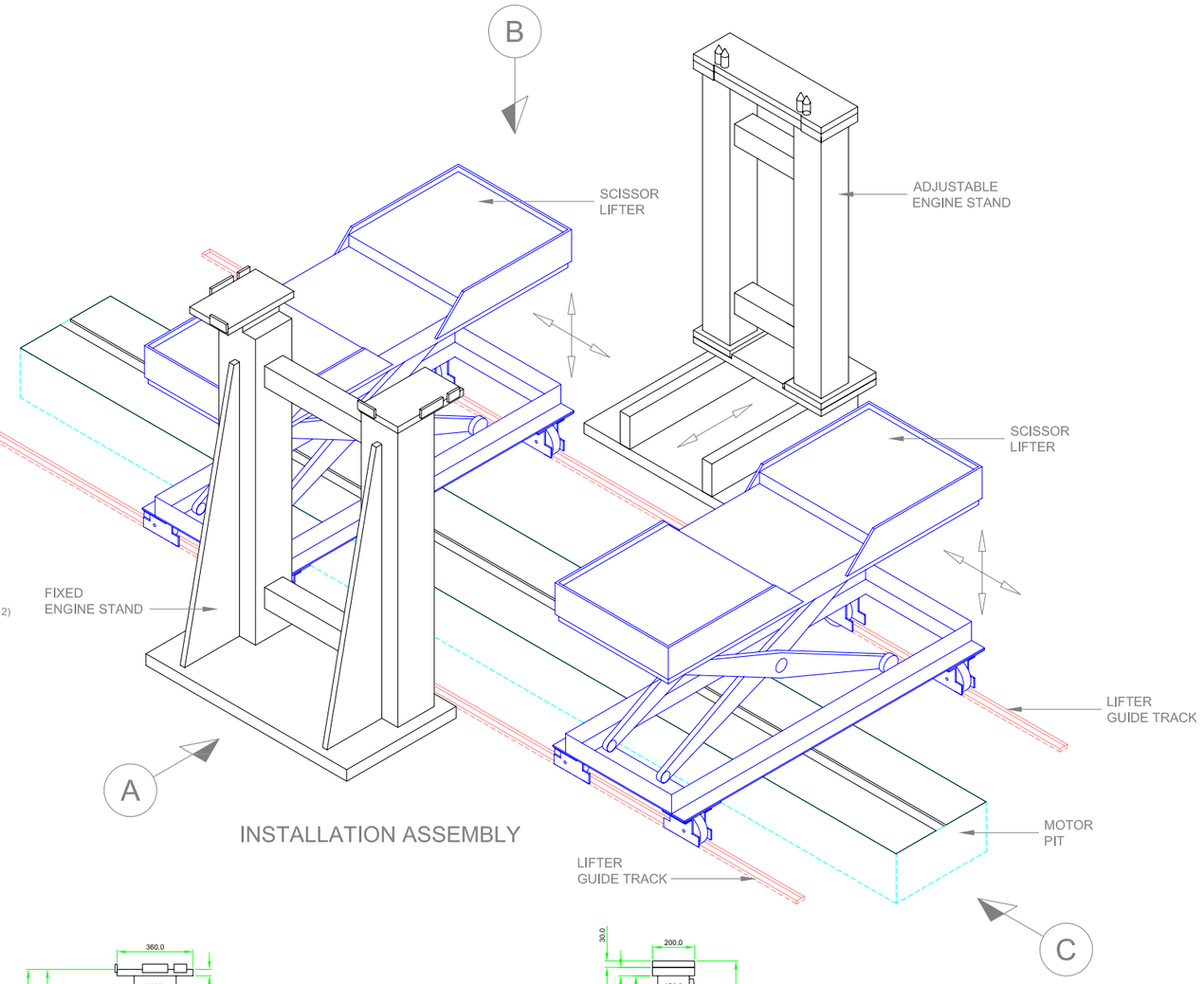

INSTALLATION ASSEMBLY

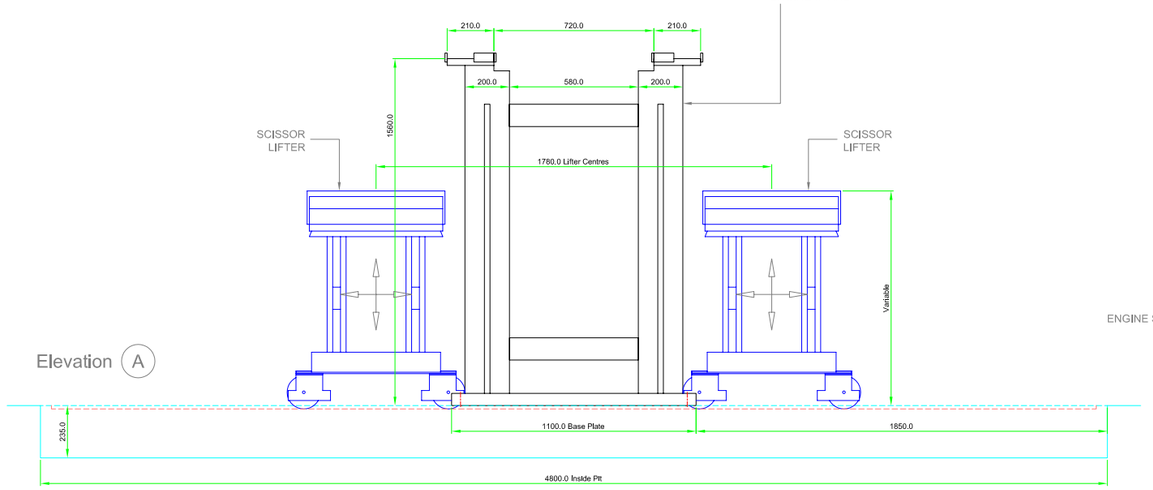

Elevation (A)

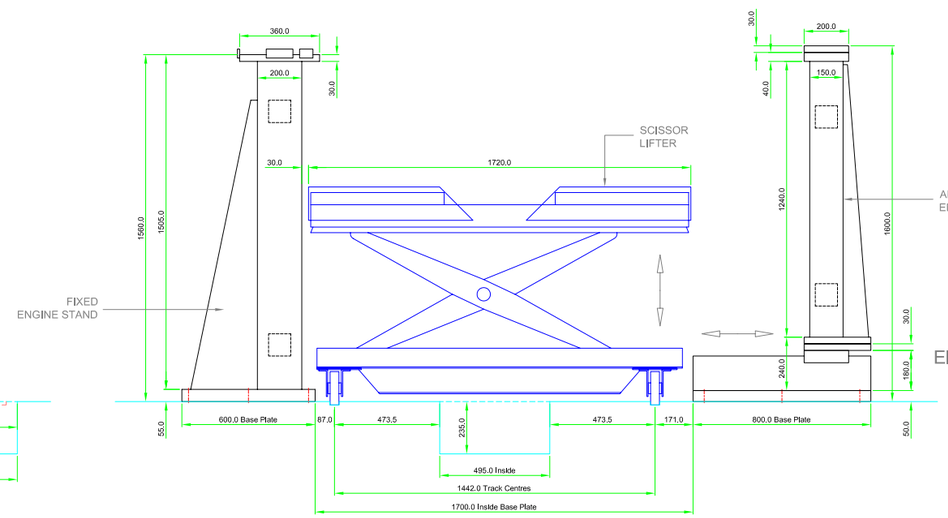

Elevation (C)